CO_2 PPM Controller

PPM-B1

Pro-Leaf

Specifications

Max Amp: 10 amps @ 220-240VAC / 50 Hz
Sensor Cord Length (ft/m): 15 / 4.5
CO_2 Control Range (PPM): 400-2000
CO_2 Accuracy (PPM): +/- 100
Weight (lbs/kg): 2.1 / 1
Dimensions (inch/mm):
5.07x4.68x1.95 / 130x120x50
Indoor use only
For Altitudes up to 6500 ft / 2000 m
Operating Temperature Range (°F/°C):
40-105 / 4-40
Maximum Relative Humidity: 80%
IP Rating: IP20

Factory Settings

CO_2 PPM Set Point:	1000 PPM
CO_2 Deadband Set Point:	50 PPM
CO_2 Calibration Set Point:	400 PPM
CO_2 Mode:	PPM UP

Overview

The PPM-B1 CO_2 Controller, with an adjustable CO_2 set point and deadband, offers precise and accurate control of 240-volt CO_2 supplementation devices. Utilizing the built in photocell feature this controller limits CO_2 production to the light hours to maximize savings and increase yields. Featuring three control modes - PPM UP for CO_2 generator use, FUZZY LOGIC for superior accuracy when utilizing a tank and regulator setup, and PPM DOWN if desired. ETL, CE, and FCC approved for safety and dependability.

Pro-Leaf : Version 5.0
www.pro-leaf.com

CO_2 Controller
PPM-B1

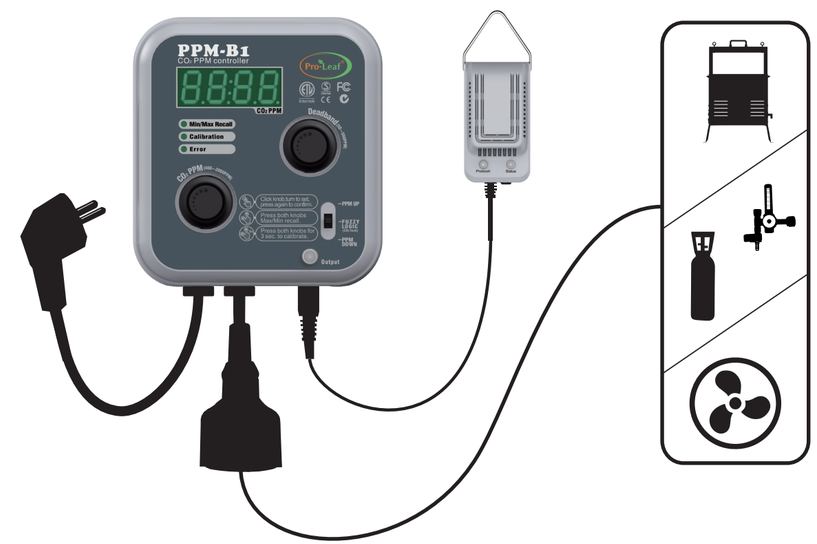

Instructions

★ The unit takes about 2 minutes to warm up & display PPM readings upon startup.

CO_2 Controller
PPM-B1

MIN/MAX RECALL

Click both knobs simultaneously to recall and display the recorded PPM MIN/MAX values - reads L XXX, HXXX. The screen will return to normal operation after a period of 5 seconds and the recorded values will be reset.

Calibration

Place the CO_2 sensor outdoors if possible (or in a room with fresh air ventilation) and press both knobs simultaneously for 3 seconds until the display reads CAL / 400. If necessary, the calibration point can be adjusted by turning the CO_2 PPM knob. Calibration begins automatically after five seconds. During calibration keep the sensor out of direct sunlight, away from sources of CO_2, and be sure to not breath on the sensor. Allow 10 minutes for the calibration process to complete and stabilize the CO_2 reading. The display will stop flashing the PPM value once the calibration process is complete.

Note about Calibration:The PPM-B1 is factory calibrated, but to ensure precise readings and optimal control it is recommended to place the sensor outside for a period of ten minutes to test, after which the displayed PPM value should be around 400 (this value might be slightly higher in city environments compared to rural environments). In the unlikely event that your controller readings differ greatly from 400 PPM it is then recommended to recalibrate the unit.

Error Codes

Error LED will blink if an error occurs.

- S.SH Please ensure the sensor connection is secure.
- OUtP If the controller does not reach the CO_2 PPM set point within two hours this error will be activated. Press any konb to reset the error.
- OUtd Please check if the outlet is overloaded or has exceeded the amperage rating. Maximum Amperage is 10 Amps.
- nErr The CO_2 sensor is requested for calibration, please follow up the calibration procedure. If the Err code is still not disappear, please contact your retail store.

Real-Time PPM Display

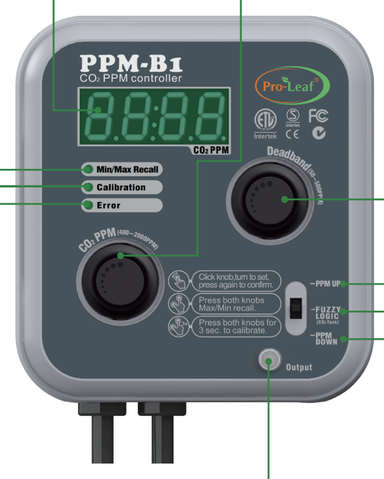

Step 1 — CO_2 PPM setpoint

Press the knob and turn to set, press again to confirm the setting.

Step 2 — Deadband

Press knob and turn to set the desired deadband level. Press knob once more to save the set point.

Example: When in PPM UP or FUZZY LOGIC mode, if CO2 PPM=1000 PPM and Deadband=50 PPM, then the CO2 output will be activated at or below 1000 PPM and turn off at 1050 PPM. For PPM DOWN, the fan will be activated at or above 1000 PPM and turn off at 950 PPM.

Step 3 — CO_2 Control Modes

PPM UP: Increases the CO_2 PPM level, recommended when using a CO_2 generator.

FUZZY LOGIC: Increases the CO_2 PPM level, recommended when using compressed CO_2 and a regulator.

PPM DOWN: Decreases the CO_2 PPM level, recommended when using a fan.

★ Important: DO NOT operate in Fuzzy Logic if using CO_2 generator.

Output

LED will be illuminated when the output is activated.

Installation Option 1

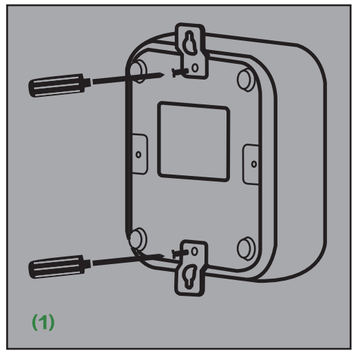

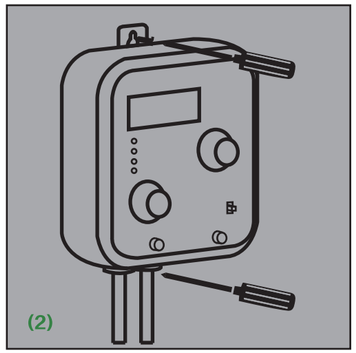

Secure the unit to a wall

☆ **DO NOT attempt to repair this controller. Please contact your retailer for service request information.**

Installation Option 2

CO_2 Controller
PPM-B1

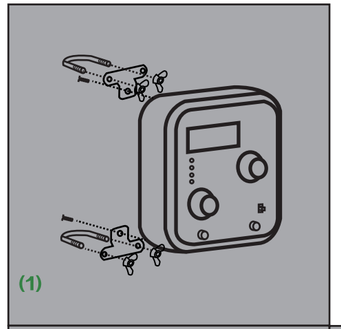

Screw the controller to the growtent tube with a U bolt

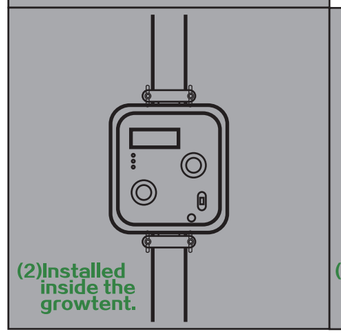

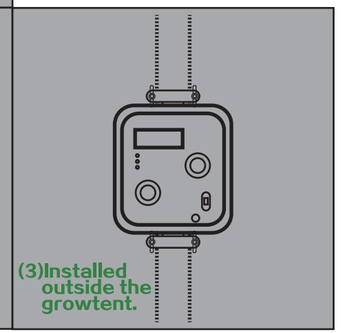

Remote CO_2 Sensor

CO_2 Controller
PPM-B1

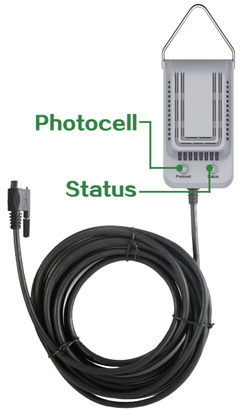

! Sulfur vaporizer warning!

If a sulfur vaporizer is used, first remove the remote sensor from the affected area or turn the controller OFF and cover the remote sensor probe with a protective plastic bag. Remove the bag before turning the power back ON.
Note: Failure to protect the sensor during Sulfur use will result in damage to the infrared CO_2 sensor and void warranty.

Note:
Do not place the sensor probe where it will come in to contact with water.
NOT WATER PROOF.

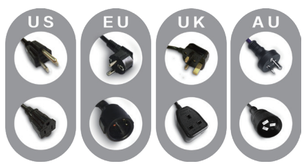

CO_2 Sensor with Photocell

Accessories:

Wall / Tent Mounting Hardware

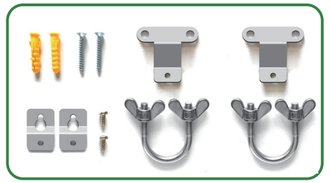

Available for separate purchase:
24V Power Adapter

IMPORTANT MESSAGE

1.**Save these instructions.** These safety and operating instructions must be kept in a safe place for future reference.
2. **Heed all warnings.** All warnings on this product and in the instructions must be observed closely.
3. **Follow all instructions.** All operating instructions must be followed.
4. If the instructions as provided by the manufacturer are not followed damage to the product may result.
5. Install your controller at least 8 ft away from any devices that produce large amounts of electronic noise, such as electronic ballasts or ozone generators.
6. **The output voltages of this controllers receptacles are the same as the input voltage.** The receptacles can only be used in conjunction with the plugs conforming to local safety standards. DO NOT attempt to insert any other plug configuration into the controller receptacles.
7. **DO NOT use this controller near a water source.** The controller is not water-proof or shock-proof, and as such should not be exposed to direct water contact or extremely high moisture.
8. DO NOT attempt repair. Any factory serviceable parts of this controller are only to be repaired or replaced by the manufacturer or other authorized agencies.
9. If the power cable insulation is broken, please stop using the product. Immediately unplug the controller and contact the retailer from whom you purchased the unit.
10. The controller is equipped with a circuit breaker for short-circuit or over-current situations. The circuit breaker will automatically shut down the product at once. All outlets of the controller are grounded for safety.
11. Do not block any ventilation openings.
12. **This product is a Safety Class I Controller.** The main plug should be inserted in a power socket outlet only if provided with a protective earth contact. Any interruption of the protective conductor inside or outside of the product is likely to make the product dangerous and is prohibited.

Available Environment Controller Models:

CO_2 Controller
PPM-B1

• Single Function

PPM-B1
(CO_2 PPM Controller)

LIGHT-B1
(Digital Lighting Controller)

TIMER-B1
(Recycle Timing Controller)

TEMP-B1
(Temperature Controller)

• CO_2 Generator

BBL-LP-4
BBL-LP-8
BBL-LP-10
BBL-NG-4
BBL-NG-8
BBL-NG-10

• Multi-Function

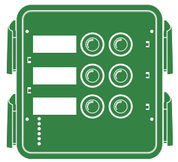

BECC-B2
(CO_2, Humidity, and Temperature)

BETC-B2
(Temperature, Humidity, and Recycle Timer)

BTLC-B2
(Lighting Controller and Recycle Timer)

Intertek Intertek

Made in China

CRS Worldwide B.V.
Slimmeweg 7,1066ev, Amsterdam, Netherland